THE INFORMATION ON THIS DRAWING IS THE PROPERTY OF CELESTRA CORPORATION, IS DISCLOSED IN CONFIDENCE AND IS NOT TO BE REPRODUCED,USED OR DISCLOSED EXCEPT FOR THE PURPOSE FOR WHICH FURNISHED.

CELESTRA CAT.NO	APP CABLE WIRE RANGE	BOLT SIZE	HEX KEY	A ±0.04	B ±0.02	C ±0.02	D ±0.015	E ±0.02	H ±0.02
CM0414B	#14-#4	1/4	SLOT	1.31	0.57	0.50	0.08	0.43	0.58

NOTES:

1. ALL DIMENSIONS ARE IN INCHES UNLESS OTHERWISE SPECIFIED.
2. LUG MATERIAL: HIGH CONDUCTIVITY WROUGHT COPPER.
3. SCREW MATERIAL: STEEL.
   FINISH: ZINC PLATED.
4. ALL MATERIALS ARE COMPLIED WITH THE RESTRICTION OF HAZARDOUS SUBSTANCES(RoHS) DIRECTIVE(2002/95/EC).
5. CONNECTOR IS FOR COPPER CONDUCTORS.

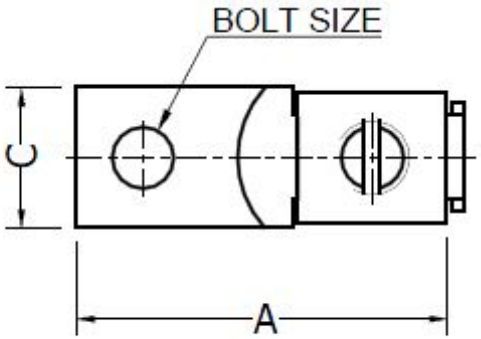

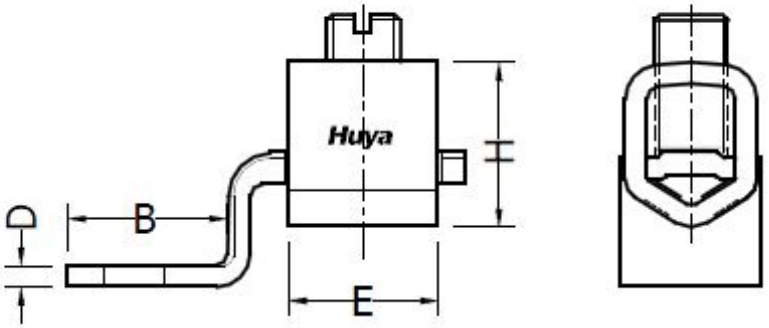

RoHS 2002/95/EC

REV	DATE	DWN	CHK	DESCRIPTION	ECN
00	18-Apr-26	Hedy Xiao	Sinia Qiu	Celestra Standards Spec. Initiated.	N/A

Huya

CELESTRA CORPORATION
76,ZHONGSI HUANCUN ROAD,ZHONGCUN TOWN, PANYU DIST,GUANGZHOU,511495 CHINA
www.celestra.cn

TITLE: COPPER MECHANICAL LUGS #14-#4

MATERIAL	PRT. NO.	SCALE	THIRD ANGLE PROJECTION
SEE NOTES	CM0414B	NTS	
FINISH: SEE NOTES	DWG. NO. 186-0113042114	UNIT: INCH	