THE INFORMATION ON THIS DRAWING IS THE PROPERTY OF CELESTRA CORPORATION, IS DISCLOSED IN CONFIDENCE AND IS NOT TO BE REPRODUCED,USED OR DISCLOSED EXCEPT FOR THE PURPOSE FOR WHICH FURNISHED.

CELESTRA CAT.NO	APP CABLE WIRE RANGE	BOLT SIZE	HEX KEY	A ±0.03	B ±0.02	C ±0.02	D ±0.015	H ±0.02
AM1151-21	500 kcmil – 1000 kcmil	5/8	3/8	3.50	2.00	2.80	0.49	1.68

NOTES:

1. ALL DIMENSIONS ARE IN INCHES UNLESS OTHERWISE SPECIFIED.
2. LUG MATERIAL: ALUMINUM ALLOY 6061-T6.
   FINISH: EIECTRO-TIN PLATE.
3. SCREW MATERIAL: ALUMINUM ALLOY 2024-T4.
   FINISH: EIECTRO-TIN PLATED.
4. ALL MATERIALS ARE COMPLIED WITH THE RESTRICTION OF HAZARDOUS SUBSTANCES(RoHS) DIRECTIVE(2002/95/EC).
5. CONNECTOR IS FOR COPPER AND ALUMINUM CONDUCTORS.

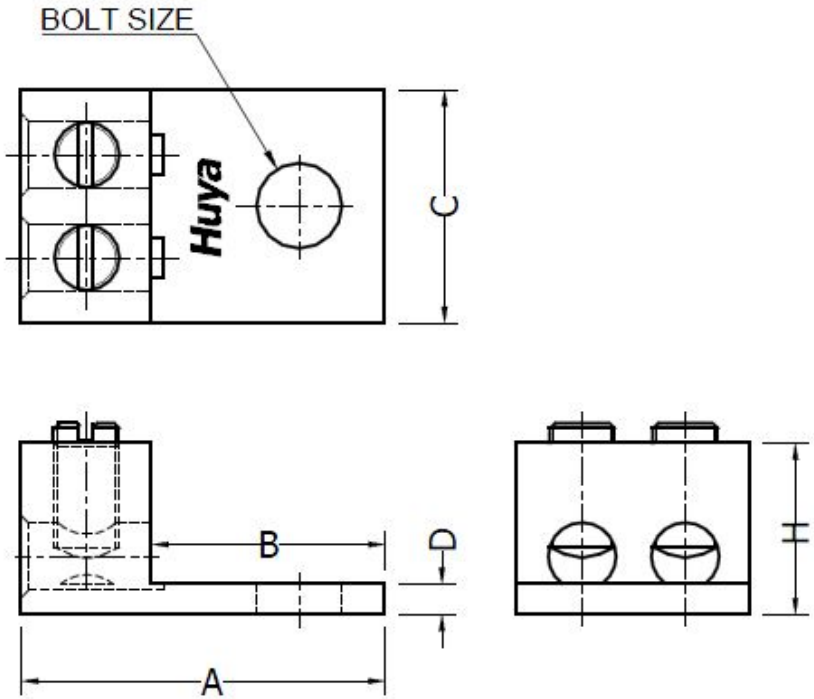

RoHS 2002/95/EC

REV	DATE	DWN	CHK	DESCRIPTION	ECN
00	01-May-26	Hedy Xiao	Sinia Qiu	Celestra Standards Spec. Initiated.	N/A

Huya

CELESTRA CORPORATION
76,ZHONGSI HUANCUN ROAD,ZHONGCUN TOWN, PANYU DIST,GUANGZHOU,511495 CHINA
www.celestra.cn

TITLE
ALUMINUM MECHANICAL LUGS
500 kcmil – 1000 kcmil

MATERIAL	PRT. NO.	SCALE	THIRD ANGLE PROJECTION
SEE NOTES	AM1151-21	NTS	
FINISH: SEE NOTES	DWG. NO. 186-0113042468	UNIT: INCH	