THE INFORMATION ON THIS DRAWING IS THE PROERTY OF CELESTRA, IS DISCLOSED IN CONFIDENCE AND NOT TO BE REPRODUCED, USED OR DISLOSED EXCEPT FOR WHICH FURNISHED.

CELESTRA CAT.NO	WIRE SIZE Code	BOLT SIZE	A ±0.06	B MIN	C ±0.04	D ±0.015	F ±0.02	G ±0.02	ID ±0.01	H ±0.02
AL351243	350 kcmil	1/2	6.32	3.00	1.52	0.34	0.50	1.75	0.75	2.62

NOTE:

1. ALL DIMENSIONS ARE IN INCHES UNLESS OTHERWISE SPECIFIED.
2. ALL DA,DB,LA,LB,WP,AL,AS AND J SERIES OF CAT.NO.S ARE LISTED BY "UNDERWRITERS INC." AND "CSA" FOR USE ON CODE WIRES AND FLEX/24 STRANDED CABLES.

   PRE-FIX CAT.NO.WITH "L" HAS NOT PEEP HOLE UNLESS OTHERWISE SPECIFIED IN THE SUFFIX OF THE CAT.NO. WITH "P".

MATERIAL: ALUMINIUM ALLOY

FINISH: ELECTOR-TIN PLATE UNLESS OTHERWISE SPECIFED PLATE PER MIL - T -16366. SUFFIX CAT.NO.WITH "SP" FOR SILVER.

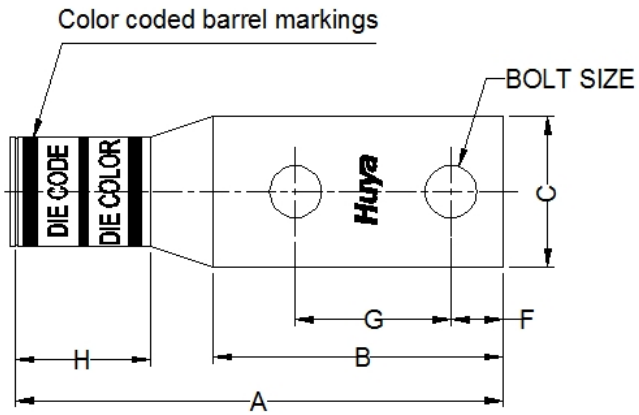

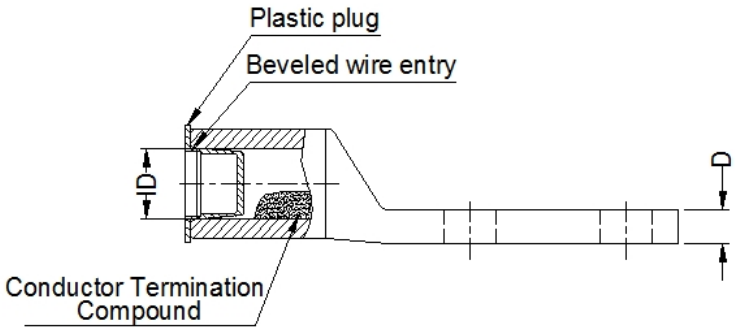

INSTALLATION GUIDE
DIE CODE = 87
DIE COLOR = Brown

REV	DATE	DWN	CHK	DESCRIPTION	ECN
00	10-Jan-26	Ruby Feng	Sinia Qiu	Celestra Standards Spec. Initialed.	

HUYA®
www.huyaco.com

CELESTRA CORPORATION
76. Huancun Rd. Zhongcun Town.
Panyu Dist. Guangzhou 511495.

TITLE: WIRE CONNECTORS AND SOLDERING LUGS FOR CODE AND FLEX CABLE

MATERIAL	PRT. NO.	SCALE	THRID ANGLE PROJECTION
ALUMINIUM ALLOY	AL351243	NTS	
FINISH: ELECTRO TIN PLATE	DWG. NO. 186-cp5219	UNIT: INCH	