THE INFORMATION ON THIS DRAWING IS THE PROERTY OF CELESTRA, IS DISCLOSED IN CONFIDENCE AND NOT TO BE REPRODUCED, USED OR DISLOSED EXCEPT FOR WHICH FURNISHED.

CELESTRA CAT.NO	Wire Size (mm²)	Dimension (mm)					
		Bolt Size	A	B	C	R	ID
MC2416N	240.00	M16	85.50	36.00	31.00	47.40	21.10

NOTE:

ALL DIMENSIONS ARE IN MILLIMETER UNLESS OTHERWISE SPECIFIED.

MATERIAL: HIGH CONDUCTIVITY WROUGHT COPPER

FINISH: ELECTRO-TIN PLATE

INSTALLATION GUIDE
DIE CODE = __
DIE COLOR = __

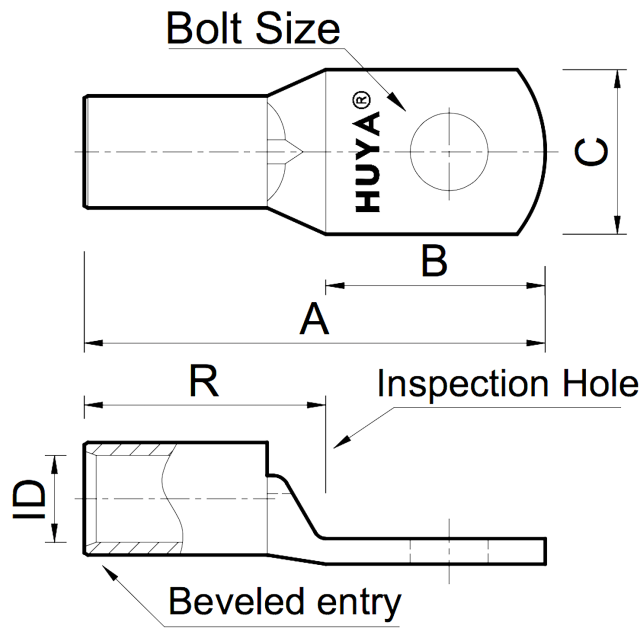

REV	DATE	DWN	CHK	DESCRIPTION	ECN
00	20-Apr-26	Ruby Feng	Sinia Qiu	Celestra Standards Spec. Initialed.	

HUYA®
www.huyaco.com

CELESTRA CORPORATION
76. Huancun Rd. Zhongcun Town.
Panyu Dist. Guangzhou 511495.

TITLE: WIRE CONNECTORS AND SOLDERING LUGS FOR CODE AND FLEX CABLE

MATERIAL	PRT. NO.	SCALE
HIGH-CONDUCTIVITY WROUGHT COPPER	MC2416N	NTS
FINISH: ELECTRO TIN PLATE	DWG. NO. 186-cp6605	UNIT: INCH

THRID ANGLE PROJECTION